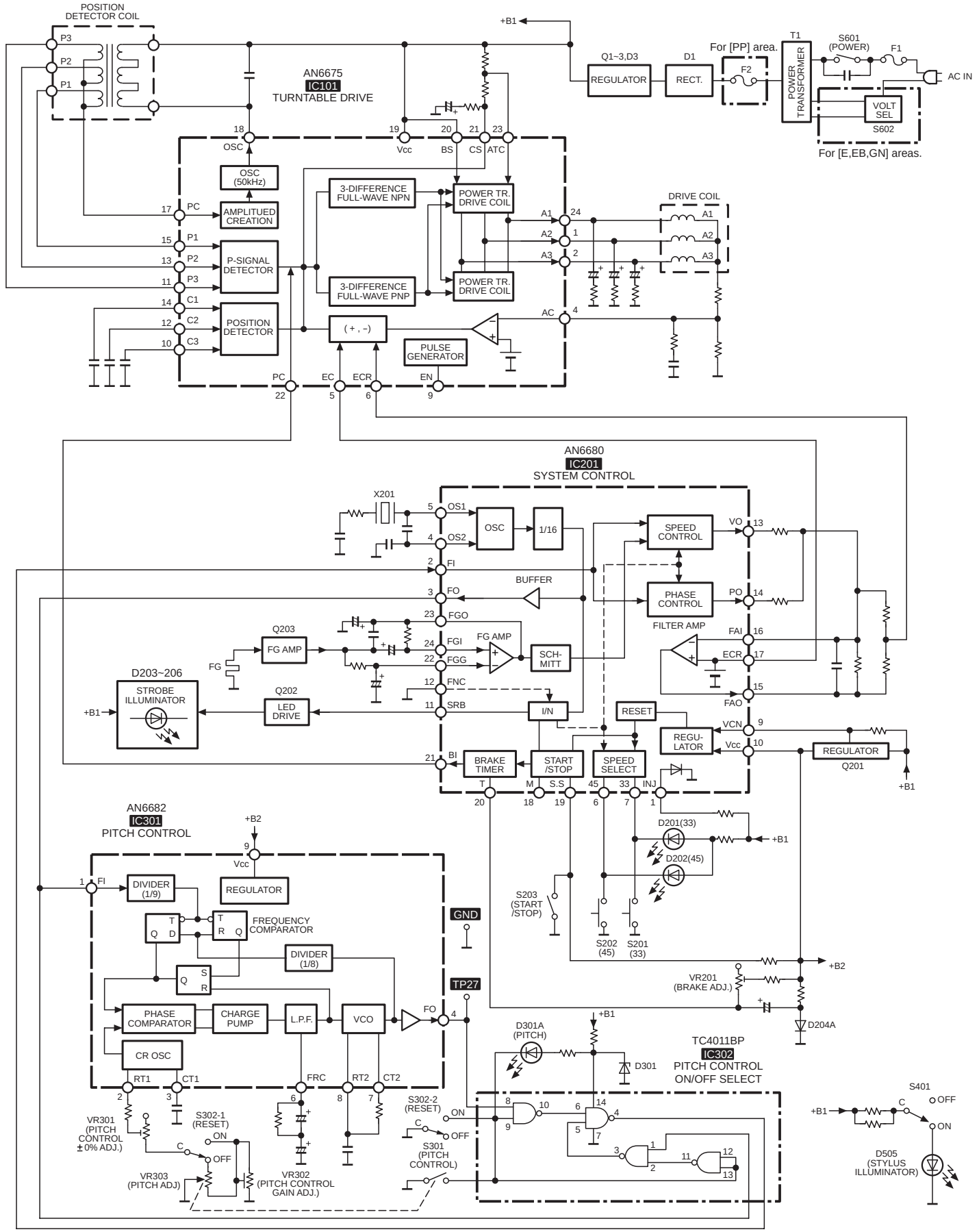

SL-1200MK5/1210MK5(PP,E,EB,GN) BLOCK DIAGRAM